4.1 MAIN CHARACTERISTICS AND NOMINAL FLOW RATES

BMF, BCF and BFC pumps are volumetric gear pumps suitable for transferring lubricant viscous liquids without any suspended solids or abrasive substances. They are self-priming pumps used for a wide range of liquids with a viscosity from 1 to 1.000 cSt. The speed of rotation is chosen according to the viscosity of the liquid. Flowrate range is from 2 to 70 L/min.

The standard construction consists of pump housing and cover in cast iron, shafts and gears in carbon steel, O-rings in Viton, sleeve bushings in Steel-Bronze-PTFE and mechanical seal in ceramic-graphite-Viton. BMF, BCF and BFC pumps are supplied with a pressure relief valve in brass.

Nozzles in inlet and outlet are of the same diameter and positioned on the same axis.

A short and straight alignment of the flow channels provides for a good suction capability and a quiet running. The helical gears result in extremely low noise levels and reduced pressure pulsation.

BMF (three phase) and BCF (single phase) are monobloc gear pumps with a very compact and strong design. These pumps have an integrated IM B34 electric motor. All the motors are IP55 with an insulation class F. Special voltages and protection IP56/IP65 on request.

The available electric motors are listed in Tables 404, 405, 406.

Fig. 401 – BMF, BCF pumps, standard version

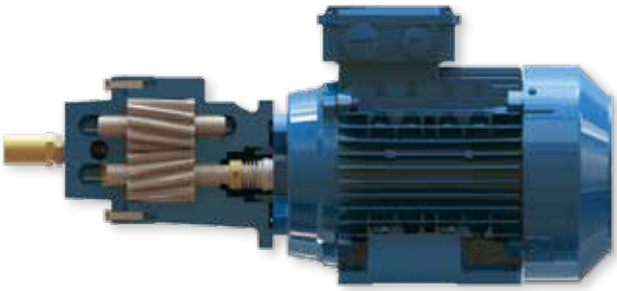

BFC pumps are designed to fit, by means of a coupling bell and coupling, an industrial electric motor in compliance with the IEC standard with B14 flange and feet (IM B34). The electric motor can be supplied on request.

In table 401 are listed the typical combinations of BFC pumps and B34 electric motors.

Fig. 402 – BFC pump, standard version

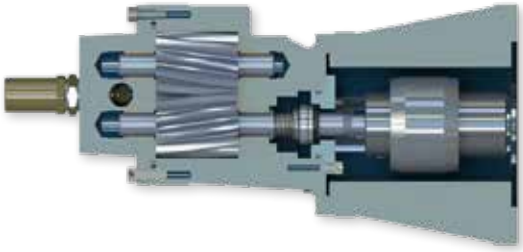

Tab. 401 – B14 flanges available on BFC Series

PUMP SIZE (BFC)	IEC Frame size						
	56	63	71	80	90	100	112
2							
3							
4							
5							
10							
15							
25							
35							
50							
60							
70							

Table 402 shows the possible flow rates for non-pressurized pumping (Δp=0) and a 46 cSt fluid.
The flow rate of gear pumps is virtually proportional to their speed. The selected speeds are the most common speeds at rated power of industrial electric motors at 50 and 60Hz.

Tab. 402 – Nominal flow rates

PUMP SIZE (BMF, BCF, BFC)	Geometrical displacement V_{geo} [cm³/rev]	Nominal flow rate Q_{teo} [L/min] at Speed n [1/min]					
		690	830	950	1150	1400	1750
2	1.5	1.0	1.2	1.4	1.7	2.1	2.6
3	2.1	1.5	1.8	2.0	2.4	3.0	3.7
4	3.0	2.0	2.5	2.8	3.4	4.1	5.2
5	4.6	3.1	3.8	4.3	5.2	6.4	8.0
10	9.1	6.3	7.5	8.6	10.5	12.7	15.9
15	13.6	9.4	11.3	12.9	15.7	19.1	23.9
25	18.2	12.5	15.1	17.3	20.9	25.5	31.8
35	26.7	18.4	22.2	25.4	30.7	37.4	46.7
50	38.0	26.2	31.5	36.1	43.7	53.2	66.5
60	46.3	32.0	38.4	44.0	53.3	64.8	81.1
70	51.0	35.2	42.3	48.4	58.6	71.3	89.2

4.2 MAIN OPTIONS

The main options available are:
- Clockwise rotation (see paragraph 4.3)
- Special seals according to liquids and temperatures (see paragraph 4.4)
- Options on relief valve (see paragraph 4.5)
- Constructions for corrosive liquids and aggressive environments (see paragraph 4.6)
- Motors (see paragraph 4.7)
- Accessories (see paragraph 4.8)
- Heatsink for maximum fluid temperature 300°C available on BFC series

4.3 SENSE OF ROTATION AND FLOW DIRECTION

The standard version of BMF and BCF pumps can operate only in one direction of rotation: counterclockwise watching the electric motor fan.

The direction of rotation of the motor, when properly connected to the mains, is shown by an arrow placed on the fan cover. Watching the electric motor fan, the flow direction will be from the left side to the right side and the pressure side (delivery) will be at the right-hand side.

On request a clockwise version can be supplied.

Fig. 403 – BMF, BCF Series - Sense of rotation and flow direction

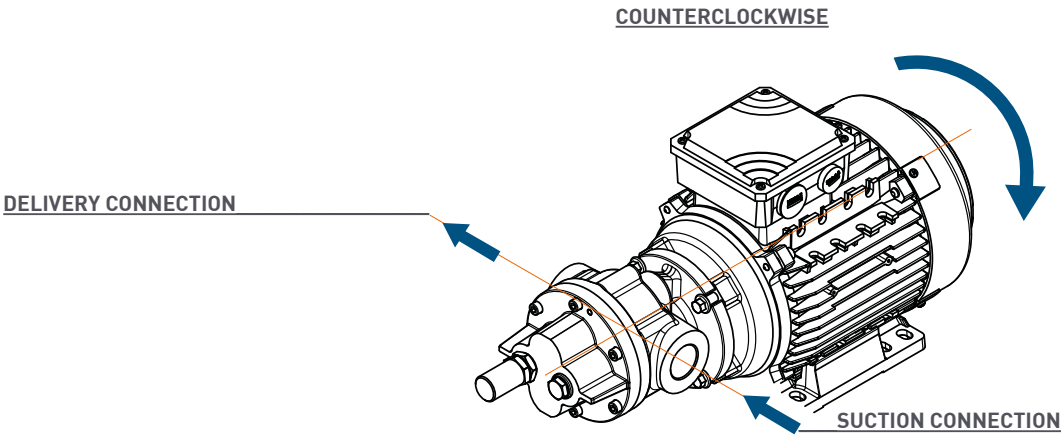

The standard version of BFC pumps, can operate only in one direction of rotation: counterclockwise watching the pump shaft end.

The direction of rotation of the motor, when properly connected to the mains, is shown by an arrow placed on the fan cover. Watching the electric motor fan, the flow direction will be from the left side to the right side and the pressure side (delivery) will be at the right-hand side.

On request a clockwise version can be supplied.
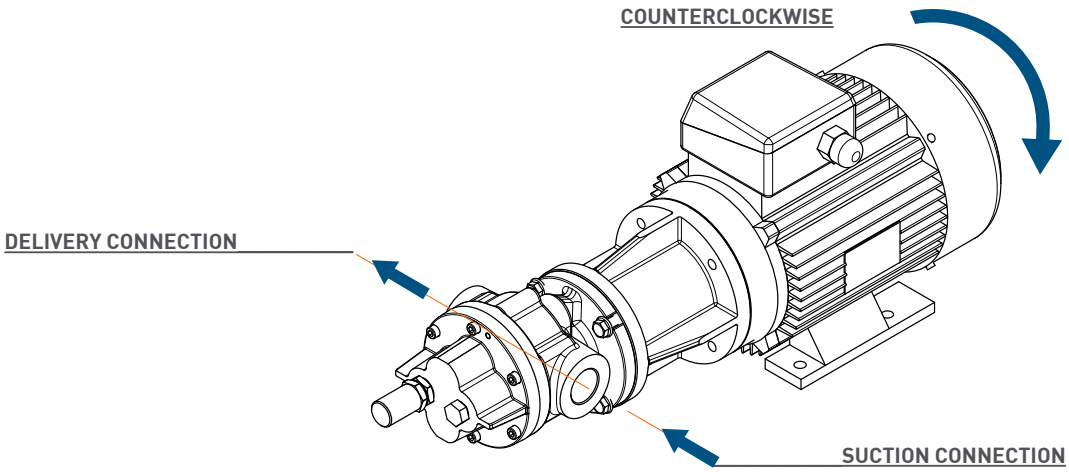
Fig. 404 – BFC Series - Sense of rotation and flow direction