FTR/FTRT

Sewage
Grinder



FTR 150-300 | FTR 400-1000 T | FTR 400-1000 T/P

Drainage and waste water pumps equipped with open impeller and grinder system able to shred sewage with suspended solids and prevent the pump from clogging. Best for emptying of septic tanks and residential sumps as well as for rain water systems and for draining of flooded areas where seamless operation is required. The quick coupling feet DN50 and DN65 is available for flanged pumps.



Grey water

Black water

Construction features

Painting	cataphoresis
Pump body	cast iron
Impeller	cast iron
Mechanical seal	double seal with oil barrier: silicon carbide on pump side, ceramic-graphite on motor side
Motor shaft	stainless steel AISI 304
Max submergence	20 m
Liquid temperature	0 - 40 °C
Grinder	treated stainless steel
Bolts	A2 stainless steel
Foot support	galvanized iron
Gaskets	NBR rubber

Motor

2 Poles induction motor	3~ 230V - 50Hz 3~ 400V - 50Hz 3~ 230/400V - 50Hz 3~ 400/690V - 50Hz 1~ 230V - 50Hz run capacitor (35µF for 1,5HP models, 50µF for 2HP model) + start capacitor (80µF with disjuntor) required
Insulation class	F
Protection degree	IPX8

FTR 150 [ ] -CF

- pump type
- motor [ ] 1~ **T** 3~
- counter-flange [ ] not included, **CF** included

LOTS				
TYPE	TRUCK		CONTAINER	
	PALLET (cm)	N° pumps	PALLET (cm)	N° pumps
FTR 150÷300(T)	85×110×145	18	85×110×190	27
FTR 400T-550T	85×110×170	12	85×110×170	12
FTR 750T-1000T	100×120×190	12	100×120×190	12

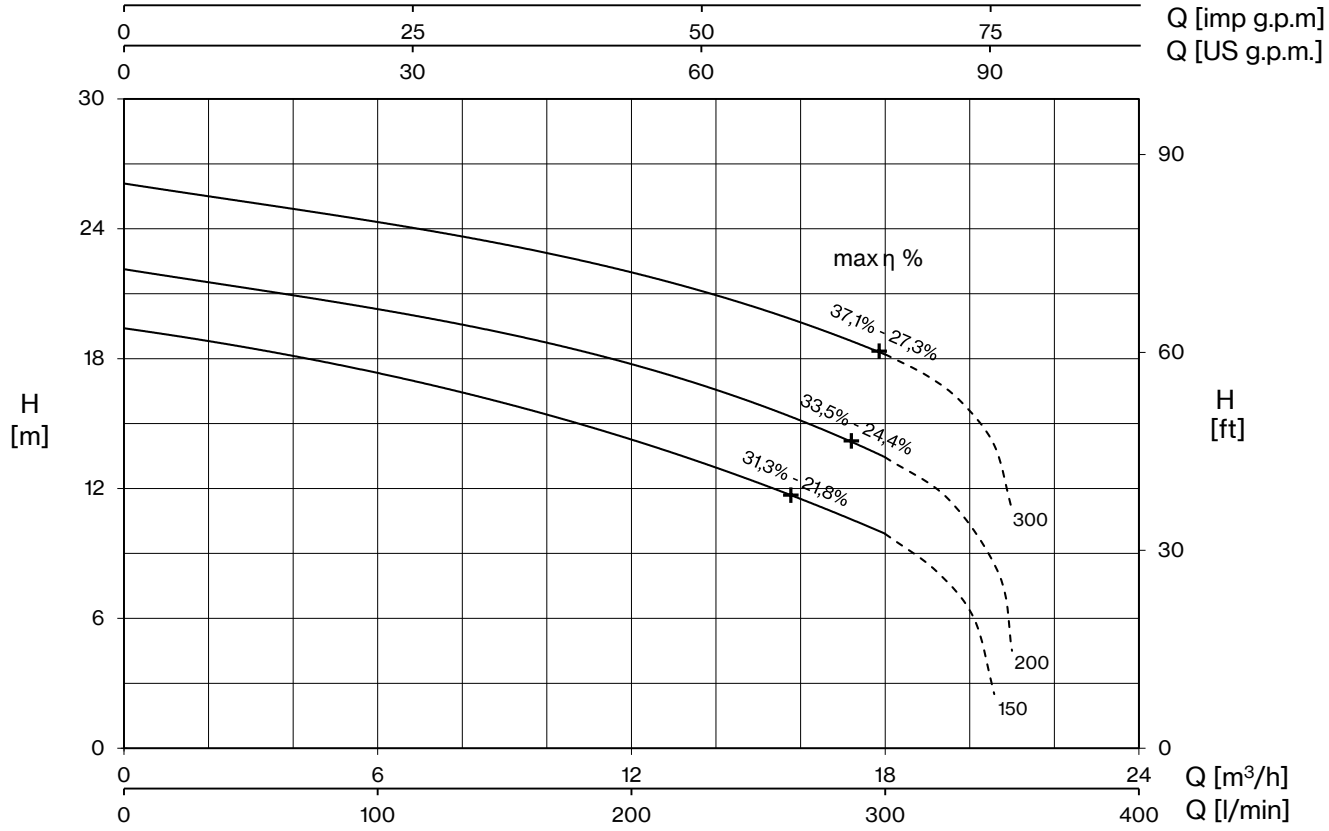

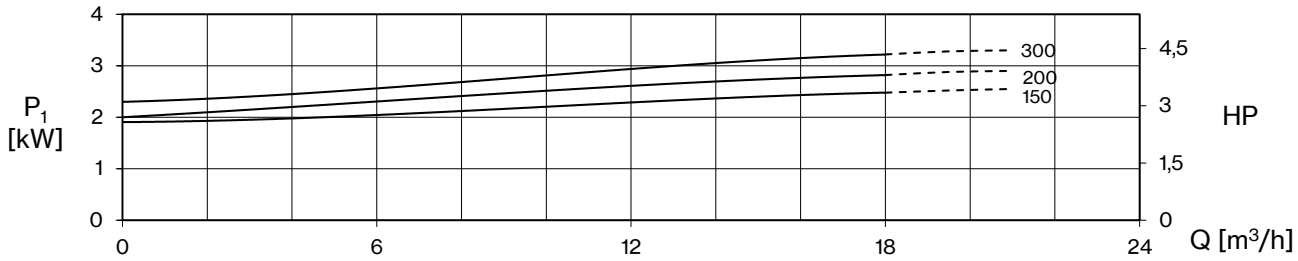

TYPE - 50 Hz		CURRENT				
1~	3~	230 V	3~ 230V (*)	3~ 400V	230/400 V ⅄ / △ (*)	400/690 V ⅄ / △
FTR 150	**FTR 150T**	11,5	7,6	4,4	-	-
FTR 200	**FTR 200T**	13,6	8,8	5,1	-	-
-	**FTR 300T**	-	10,0	5,8	-	-

(*) no standard execution

+ max η %

max hydraulic efficiency and respective total efficiency

TYPE - 50 Hz		P2		P1		Q (m³/h - l/min)							
1~	3~			1~	3~	0	3	6	9	12	13,2	15	18
						0	50	100	150	200	220	250	300
		HP	kW	kW		H (m)							
FTR 150	**FTR 150T**	1,5	1,1	2,6	2,5	19,4	18,5	17,3	16,0	14,2	13,5	12,3	9,9
FTR 200	**FTR 200T**	2	1,5	3,0	2,8	22,1	21,3	20,3	19,1	17,7	17,1	16,0	13,4
-	**FTR 300T**	3	2,2	-	3,2	26,1	25,2	24,3	23,3	22,0	21,4	20,3	18,2

FTR/FTRT

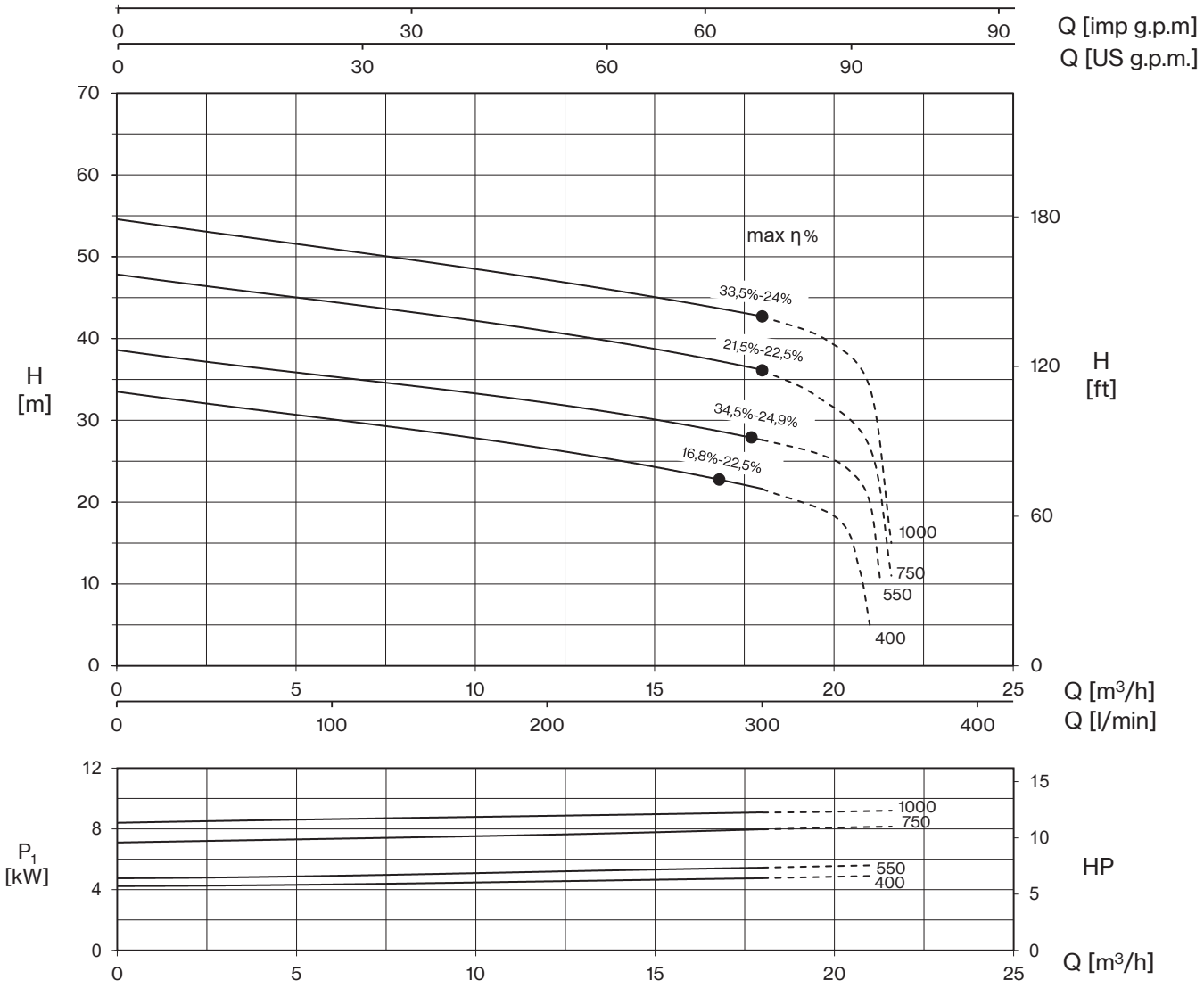

TYPE - 50 Hz	CURRENT			
3~	3~ 230V (*)	3~ 400V	230/400V ⅄ / △ (*)	400/690V ⅄ / △
FTR 400T	13,0	7,5	-	-
FTR 550T	15,9	9,2	-	-
FTR 750T	-	13,9	24	13,9
FTR 1000T	-	15,5	26,8	15,5

(*) no standard execution

+ max η %

max hydraulic efficiency and respective total efficiency

TYPE - 50 Hz	P2		P1	Q (m³/h - l/min)						
3~				0	3	6	9	12	15	18
				0	50	100	150	200	250	300
	HP	kW	kW	H (m)						
FTR 400T	4	3	4,5	33,5	31,8	30,1	28,5	26,4	24,4	21,6
FTR 550T	5,5	4	5,3	38,6	36,9	35,3	33,9	32,1	30,1	27,6
FTR 750T	7,5	5,5	8,0	47,8	46,2	44,5	42,7	40,8	38,9	36,1
FTR 1000T	10	7,5	9,1	54,6	52,7	51,0	49,2	47,1	45,1	42,7

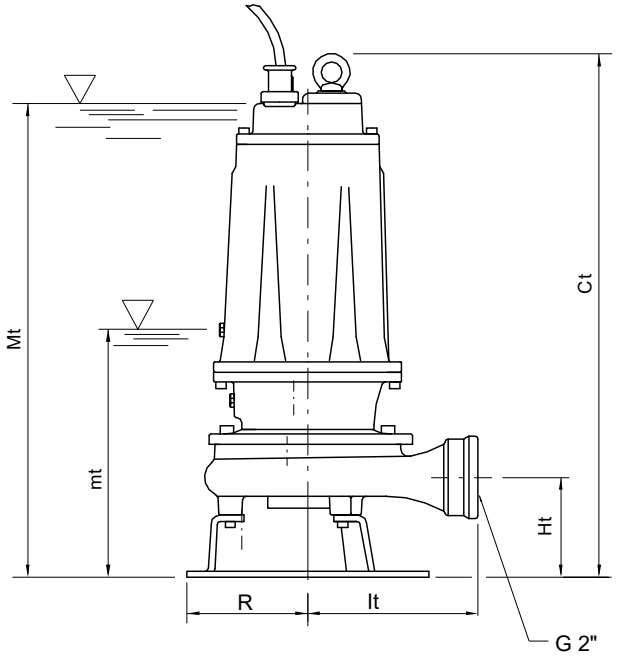

ACCESSORIES

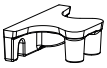

Quick coupling kit

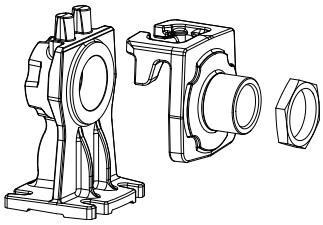

mt: minimum working level
Mt: minimum submengence level for continuos duty

TYPE		DIMENSIONS (mm)							Kg
1~	3~	Ct	Ht	R	It	mt	Mt	DNM	
FTR 150	**FTR 150T**	513	102	117	174	205	475	2" G	38
FTR 200	**FTR 200T**	513	102	117	174	205	475	2" G	38,5
-	**FTR 300T**	513	102	117	174	205	475	2" G	38

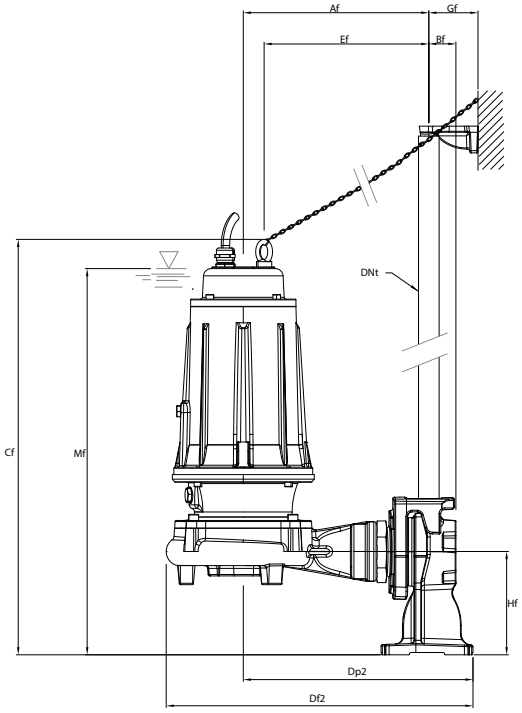

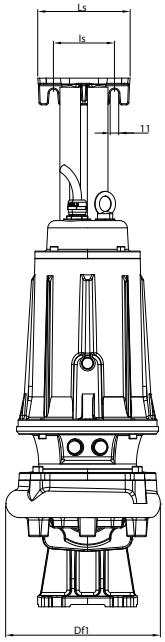

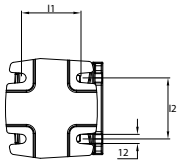

Mf: minimum submengence level for continuos duty

TYPE		DIMENSIONS (mm)												
1~	3~	Af	Bf	Cf	Df1	Df2	Dp2	Ef	Gf	Hf	l1	l2	ls	Ls	Mf
FTR 150	**FTR 150T**	243	36	545	203	402	301	216	65	135	78	80	80	121	506
FTR 200	**FTR 200T**	243	36	545	203	402	301	216	65	135	78	80	80	121	506
-	**FTR 300T**	243	36	545	203	402	301	216	65	135	78	80	80	121	506

FTR/FTRT

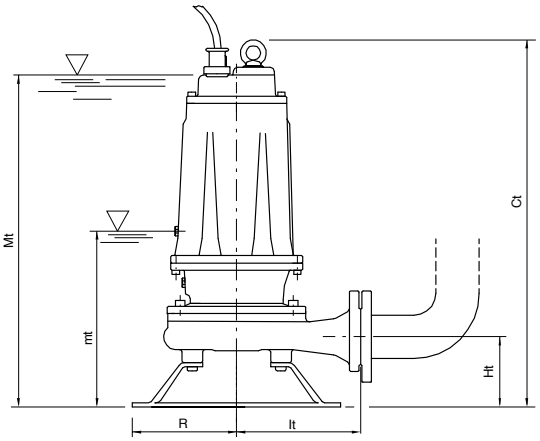

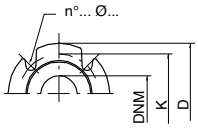

ACCESSORIES

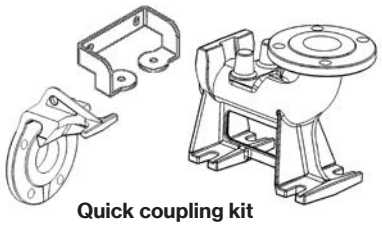

Quick coupling kit



Counterflange

mt: minimum working level
Mt: minimum submengence level for continuos duty

TYPE	DIMENSIONS (mm)							Kg
3~	Ct	Ht	R	It	mt	Mt	DNM	
FTR 400T	595	112	160	190	265	550	50	62,5
FTR 550T	595	112	160	190	265	550	50	65,5
FTR 750T	680	160	180	250	280	630	65	91,5
FTR 1000T	680	160	180	250	280	630	65	94,5

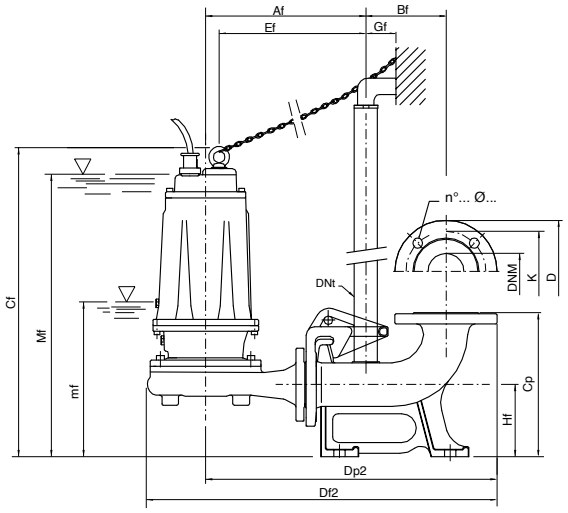

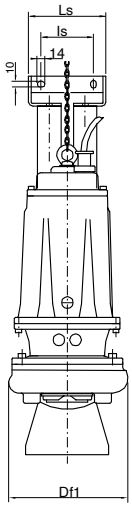

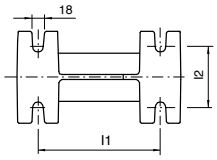

mf: minimum working level
Mf: minimum submengence level for continuos duty

Flange UNI PN 10 (mm)			
DNM	K	D	n°... ø...
50	125	165	4... 18...
65	145	185	4... 18...

TYPE	DIMENSIONS (mm)																
3~	Af	Bf	Cf	Cp	Df1	Df2	Dp2	DNt	Ef	Gf	Hf	I1	I2	Is	Ls	mf	Mf	DNM
FTR 400T/P	300	145	614	260	237	654	538	1" ¼	269	55	130	200	100	95	140	290	566	50
FTR 550T/P	300	145	614	260	237	654	538	1" ¼	269	55	130	200	100	95	140	290	566	50
FTR 750T/P	331	145	656	260	279	710	569	1" ¼	297	55	130	200	100	95	140	290	600	65
FTR 1000T/P	331	145	656	260	279	710	569	1" ¼	297	55	130	250	100	95	140	290	600	65

TYPE	PROTECTION		1 PUMP CONTROL PANEL			2 PUMPS CONTROL PANEL		
	1~ 230V	3~ 400V	1~ 230V	3~ 400V	400/690 V	1~ 230V	3~ 400V	400/690 V
FTR 150	PMLD 15/35-13	PT 20-30-40/4.3-6.8	EQSM + 35µF + 80µF*	EQSMT 10		EQ2SM + 2×35µF + 2×80µF*	EQ2SMT 10	
FTR 200	PMLD 20/50-15	PT 20-30-40/4.3-6.8	EQSM + 50µF + 80µF*	EQSMT 10		EQ2SM + 2×50µF + 2×80µF*	EQ2SMT 10	
FTR 300T		PT 20-30-40/4.3-6.8		EQSMT 10			EQ2SMT 10	
FTR 400T		PT 40-50/5.7-9.1		EQSMT 10			EQ2SMT 10	
FTR 550T		PT 55-75/8.6-13.5		EQSMT 10			EQ2SMT 10	
FTR 750T		PT 100/12.5-16.5		EQSMT 10	QST 7		EQ2SMT 10	Q2ST 7
FTR 1000T		PT 125-150/16-21		EQSMT 10	QST 10		EQ2SMT 15	Q2ST 10

**start capacitor with disjuntor*